UniStream®
Built-in

Technical Specifications
US5-B5-R38, US5-B10-R38
US5-B5-T42, US5-B10-T42
US7-B5-R38, US7-B10-R38
US7-B5-T42, US7-B10-T42

Unitronics' UniStream® Built-in series are PLC+HMI All-in-One programmable controllers that comprise built-in HMI and built-in I/Os.

Model numbers in this document

- **Beginning**: model numbers beginning with USx refer to any member of the Built-in series
- **Middle**: the series is available in two versions: UniStream Built-in and UniStream Built-in Pro. Model numbers including:
  - **B5** refer to standard UniStream Built-in (e.g. USx-B5-R38)
  - **B10** refer to UniStream Built-in Pro (e.g. USx-B10-R38)
    B10 models offer additional features, detailed below.
    If the letter "B" is followed by "x" it refers to **both** B5 and B10 models.
  - **End**: the end of the model number indicates the built-in I/O as shown in the example table below. This document provides the specifications for the I/Os.

USx-Bx-R38	USx-Bx-T42
• 24 x Digital inputs, 24VDC, sink/source, including 4 High speed counter input channels [1] • 2 x Analog inp0uts, 0÷10V / 0÷20mA, 12 bits • 12 x Relay outputs	• 24 x Digital inputs, 24VDC, sink/source, including 4 High speed counter input channels [1] • 2 x Analog inputs, 0÷10V / 0÷20mA, 12 bits • 16 x Transistor outputs, pnp, including 2 PWM output channels

Power Supply		**USx-Bx-R38**	**USx-Bx-T42**
Input voltage		24VDC	24VDC
Permissible range		20.4VDC to 28.8VDC	20.4VDC to 28.8VDC
Max. current consumption	US5	0.48A@24VDC	0.4A@24VDC
	US7	0.57A@24VDC	0.49A@24VDC
Isolation		None	

Display	**UniStream® 5"**	**UniStream® 7"**
LCD type	TFT	
Backlight type	White LED	
Luminous intensity (brightness)	Typically 350 nits (cd/m2), at 25°C	Typically 400 nits (cd/m2), at 25°C
Backlight longevity [2]	30k hours	
Resolution (pixels)	800 x 480 (WVGA)	

Size	5”	7"
Viewing area	Width x Height (mm) 108 x 64.8	Width x Height (mm) 154.08 x 85.92
Color support	65,536 (16bit)	
Surface treatment	Anti-glare	
Touch screen	Resistive Analog	
Actuation force (min)	> 80 g (0.176 lb)	

General	
I/O support	Up to 2,048 I/O points
Built-in I/O	According to model
Local I/O expansion	To add local I/Os, use UAG-CX I/O Expansion Adapters(3) (4). These adapters provide the connection point for standard UniStream Uni-I/O™ modules.
Communication ports	
Built-in COM ports	Specifications are provided below in the section Communications
Add-on Ports	Add up to 3 ports to a single controller using Uni-COM™ UAC-CX Modules(4).

Internal memory	**UniStream® Built-in**	**UniStream® Built-in Pro**
	RAM: 512MB ROM: 3GB system memory 1GB user memory	RAM: 1GB ROM: 6GB system memory 2GB user memory
Ladder memory	1 MB	
External memory	microSD or microSDHC card Size: up to 32GB Data Speed: up to 200Mbps	
Bit operation	0.13 µs	
Battery	Model: 3V CR2032 Lithium battery (5) Battery lifetime: 4 years typical, at 25°C Battery Low detection and indication (via the HMI and via System Tag).	

Audio (Pro B10 models only)	
Bit Rate	192kbps
Audio compatibility	Stereo MP3 files
Interface	3.5mm Audio-out jack - use shielded audio cable of up to 3 m (9.84 ft)
Impedance	16Ω, 32Ω
Isolation	None

Video (Pro B10 models only)	
Supported Formats	MPEG-4 Visual , AVC/H.264

Communication (Built-in Ports)	
Ethernet port	
Number of ports	1
Port type	10/100 Base-T (RJ45)
Auto crossover	Yes
Auto negotiation	Yes
Isolation voltage	500VAC for 1 minute
Cable	Shielded CAT5e cable, up to 100 m (328 ft)
USB device [6]	
Number of ports	1
Port type	Mini-B
Data rate	USB 2.0 (480Mbps)
Isolation	None
Cable	USB 2.0 compliant; < 3 m (9.84 ft)
USB host	
Number of ports	1
Port type	Type A
Data rate	USB 2.0 (480Mbps)
Isolation	None
Cable	USB 2.0 compliant; < 3 m (9.84 ft)
Over current protection	Yes

Digital Inputs	
Number of inputs	24
Type	Sink or Source
Isolation voltage	
Input to bus	500VAC for 1 minute
Input to input	None
Nominal voltage	I0-I9, I18-I23: 24VDC @ 6mA I10-I17: 24VDC @ 8mA
Input voltage	
Sink/Source	On state: 15-30VDC, 4mA min. Off state: 0-5VDC, 1mA max.
Nominal impedance	I0-I9, I18-I23: 4kΩ I10-I17: 3kΩ
Filter	I0-I9, I18-I23: 6ms typical I10-I17: 5.5µs, 50µs, 0.5ms, 6ms, 12ms

High speed inputs [1]	
Frequency / Period	Pulse/Direction mode: 90kHz max. / 11.1µs min (t_p in the Pulse/Dir Mode figure below). Quadrature mode: 80kHz max. / 12.5µs min (t_p in the Quadrature Mode figure below).
Pulse width	Pulse/Direction mode: 5.1µs min. for each state (t_w in Pulse/Dir Mode figure below). Quadrature mode: 2.5µs min. for each state (t_w in Quadrature Mode figure below).
Cable	Shielded twisted pair

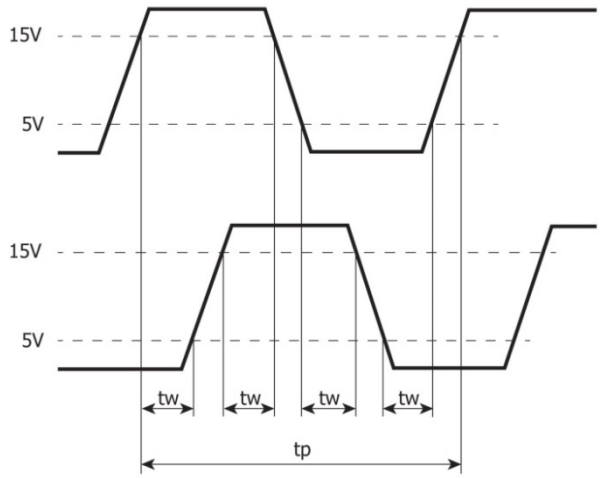

Quadrature Mode

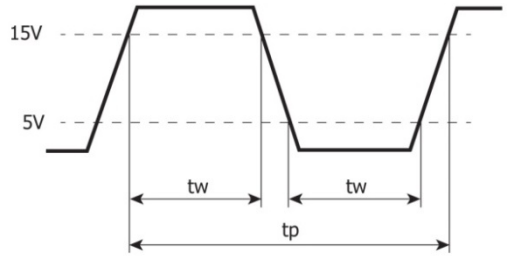

Pulse/Direction mode

Analog Inputs			
Number of inputs	2		
Input range [7] [8]	**Input Type**	**Nominal Values**	**Over-range Values ***
	0 ÷ 10VDC	0 ≤ Vin ≤ 10VDC	10 < Vin ≤ 10.15VDC
	0 ÷ 20mA	0 ≤ Iin ≤ 20mA	20 < Iin ≤ 20.3mA
	*** Overflow** [9] is declared when an input value exceeds the Over-range boundary.		
Absolute maximum rating	±30V (Voltage), ±30mA (Current)		
Isolation	None		
Conversion method	Successive approximation		
Resolution	12 bits		
Accuracy (25°C / -20°C to 55°C)	±0.3% / ±0.9% of full scale		
Input impedence	541kΩ (Voltage), 248Ω (Current)		
Noise rejection	10Hz, 50Hz, 60Hz, 400Hz		

Step response [10] (0 to 100% of final value)	**Smoothing**	**Noise Rejection Frequency**			
		400Hz	60Hz	50Hz	10Hz
	None	2.7ms	16.86ms	20.2ms	100.2ms
	Weak	10.2ms	66.86ms	80.2ms	400.2ms
	Medium	20.2ms	133.53ms	160.2ms	800.2ms
	Strong	40.2ms	266.86ms	320.2ms	1600.2ms
Update time [10]	**Noise Rejection Frequency**	**Update Time**			
	400Hz	5ms			
	60Hz	4.17ms			
	50Hz	5ms			
	10Hz	10ms			
Operational signal range (signal + common mode)	Voltage mode – AIx: -1V ÷ 10.5V ; CM1: -1V ÷ 0.5V Current mode – AIx: -1V ÷ 5.5V ; CM1: -1V ÷ 0.5V (x=0 or 1)				
Cable	Shielded twisted pair				
Diagnostics [9]	Analog input overflow				

Relay Outputs (USx-Bx-R38)	
Number of outputs	12 (O0 to O11)
Output type	Relay, SPST-NO (Form A)
Isolation groups	Two groups of 6 outputs each
Isolation voltage	
Group to bus	1,500VAC for 1 minute
Group to group	1,500VAC for 1 minute
Output to output within group	None
Current	2A maximum per output (Resistive load) 8A maximum per group
Voltage	250VAC / 30VDC maximum
Minimum load	1mA, 5VDC
Switching time	10ms maximum
Short-circuit protection	None
Life expectancy [11]	100k operations at maximum load

Transistor Outputs (USx-Bx-T42)	
Number of outputs	16
Output type	Transistor, Source (pnp)
Isolation voltage	

Output to bus	500VAC for 1 minute
Output to output	None
Outputs power supply to bus	500VAC for 1 minute
Outputs power supply to output	None
Current	0.5A maximum per output
Voltage	See Transistor Outputs Power Supply specfication below
ON state voltage drop	0.5V maximum
OFF state leakage current	10µA maximum
Switching times	Turn-on/off: 80µs max. (Load resistance < 4kΩ)
PWM Frequency (12)	O0, O1: 3kHz max. (Load resistance < 4kΩ)
Short-circuit protection	Yes

Transistor Outputs Power Supply (USx-Bx-T42)	
Nominal operating voltage	24VDC
Operating voltage	20.4 – 28.8VDC
Maximum current consumption	30mA@24VDC Current consumption does not include load current

Environmental	
Protection	Front face : IP65/66, NEMA 4X Rear side: IP20, NEMA1
Operating temperature	-20°C to 55°C (-4°F to 131°F)
Storage temperature	-30°C to 70°C (-22°F to 158°F)
Relative Humidity (RH)	5% to 95% (non-condensing)
Operating Altitude	2,000 m (6,562 ft)
Shock	IEC 60068-2-27, 15G, 11ms duration
Vibration	IEC 60068-2-6, 5Hz to 8.4Hz, 3.5mm constant amplitude, 8.4Hz to 150Hz, 1G acceleration

Dimensions		
	Weight	Size
US5-Bx-R38	0.39 Kg (0.86 lb)	Refer to the images on page 7
US5-Bx-T42	0.36 Kg (0.79 lb)	
US7-Bx-R38	0.71 Kg (1.56 lb)	Refer to the images on page 8
US7-Bx-T42	0.68 Kg (1.49 lb)	

UniStream 5"

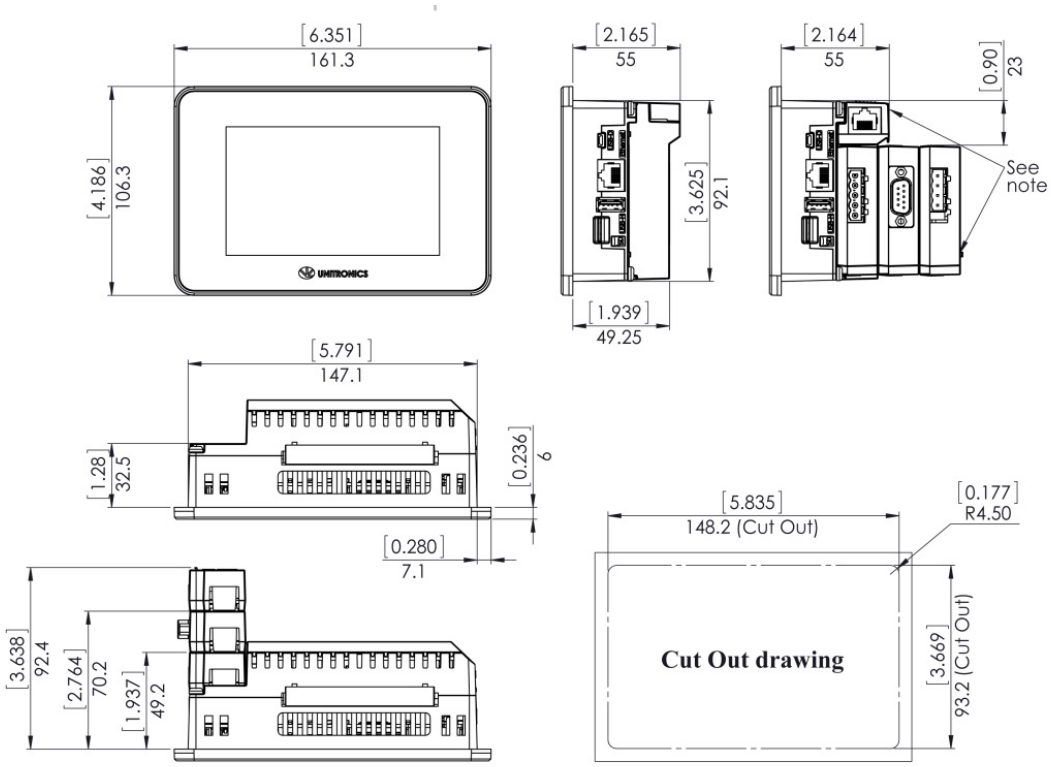

UniStream 7"

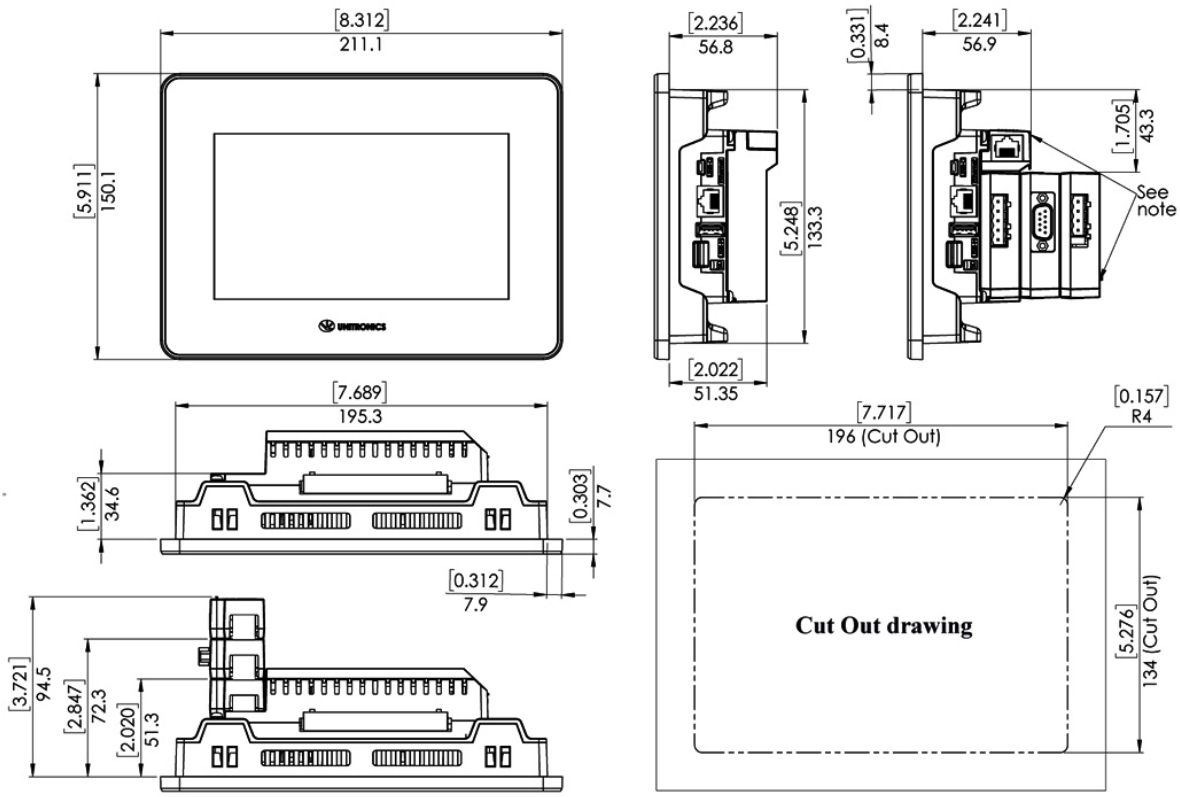

Notes:

1. Eight of the digital inputs (I10-I17) may be configured to function either as normal, or as high speed digital inputs, that can receive high speed pulse signals from up to two sensors or shaft encoders.
2. The HMI panel's backlight longevity is the typical operating time after which the brightness drops to 50% of its original level.
3. UAG-CX Expansion Adapter Kits comprise a Base unit, an End unit, and a connecting cable. You plug the Base Unit into the controller's I/O Expansion Jack and connect standard UniStream Uni-I/O™ modules. For more information, refer to the product's installation guide and technical specifications.
4. Uni-COM™ CX modules plug directly into the Uni-COM™ CX Module Jack on the back of the controller.
   UAC-CX modules may be installed in the following configurations:
   - If a module comprising a serial port is snapped directly into to the back of UniStream™, it may be followed only by another serial module, for a total of 2.
   - If your configuration includes a CANbus module, it must be snapped directly to the back of UniStream. The CANbus module may be followed by up to two serial modules, for a total of 3.
   For more information, refer to the product's installation guide and technical specifications.
5. When replacing the unit's battery, make sure that the new one has environmental specifications that are similar or better than the one specified in this document.
6. The USB device port is used to connect the device to a PC.
7. The 4-20mA input option is implemented using 0-20mA input range.
8. The analog inputs measure values that are slightly higher than the nominal input range (Input Over-range).

Note that when the input overflow occurs, it is indicated in the corresponding I/O Status tag while the input value is registered as the maximum permissible value. For example, if the specified input range is 0 ÷ 10V, the Over-range values can reach up to 10.15V, and any input voltage higher than that will still register as 10.15V while the Overflow system tag is turned on.

9. The diagnostics results are indicated in the system tags and can be observed through the UniApps™ or the online state of the UniLogic™.
10. Step response and update time are independent of the number of channels that are used.
11. Life expectancy of the relay contacts depends on the application that they are used in. The product's installation guide provides procedures for using the contacts with long cables or with inductive loads.
12. Outputs O0 and O1 can be configured as either normal digital outputs or as PWM outputs. PWM outputs specifications apply only when outputs are configured as PWM outputs.

08/18